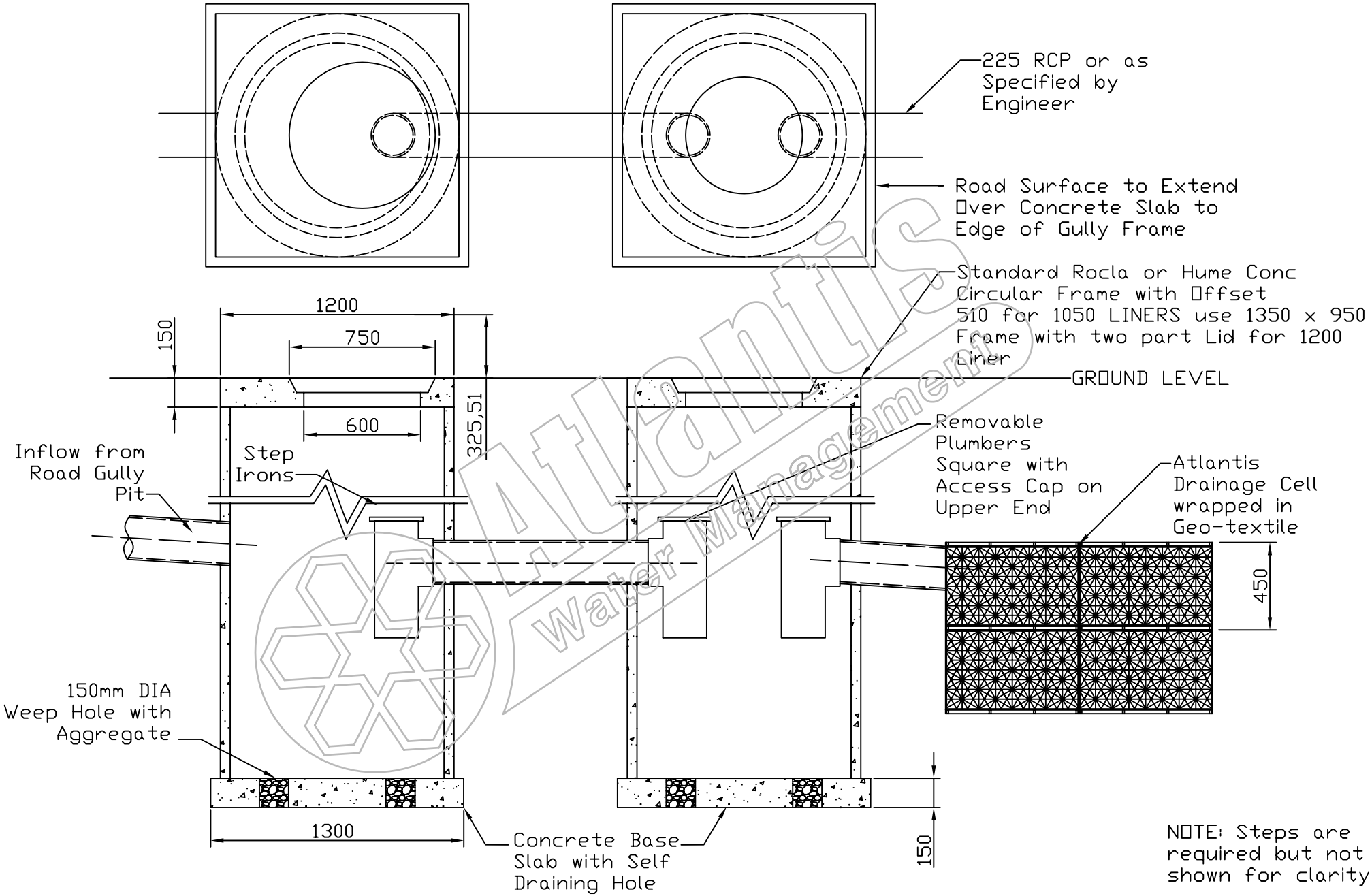

Atlantis

Comments: All Measurements in mm.

DISCLAIMER: *All information provided in this publication is correct to the best of the Company' Knowledge and is given out in Good Faith. This information is intended only as a general guide, no responsibility can be accepted for any errors, omissions or In-correct assumption. As each project is unique, and as Rebirth Pty Ltd, Atlantis Water Management, Atlantis Corporation Pty Ltd and Its Distributors and Agents World Wide have no direct control over the methods employed by the User in Specifying, Installing or Supervising of its products hence no Responsibility is accepted by Rebirth Pty Ltd, Atlantis Water Management, Atlantis Corporation Pty Ltd and Its Distributors and Agents World Wide. Users should satisfy themselves as to the suitability of the product for their purpose.*

All product designs, and specification are subject to change without further notice. All Atlantis products are tested in approved NATA laboratories, and safe allowed tolerance should be practised in actual field, due to any unforseen situations, onsite and on products. All material contained within this brochure is Copy write, and belongs to Rebirth Pty Ltd Australia. No part of this brochure may be reproduced or transmitted in any form or by any means, electronic, mechanical, photocopying, recording or otherwise, without prior written permission of Rebirth Pty Ltd. Australia, Atlantis Water Management, Atlantis Corporation Pty Ltd. Copyright @ 2002 by Rebirth Pty Ltd. Australia, Atlantis Water Management, Atlantis Corporation Pty Ltd. Australia.

Scale:	Drawing No: APM 0020	Revisions:
Date: 15/09/03		
Drawing Title: Stormwater Manhole Detail		